LET	ALTERATION	DATE	BY
J	TRACED UP TO DATE	5-16-38	
K	Q908A10-8 NOT Q908A12-6	9-22-38	
L	ELIMINATED HOLES WERE ADDED		
M	E.O. 10005A E.O. 10674 CHANGED TUBING & FITTINGS TO 18" L.G.	7-27-38	
N	E.O. 22192 AN515-D8-8 WAS 8 1/4" SCREW AN515-D8-10 WAS 6 1/2" SCREW AN365-D832 ADDED	10-29-38	

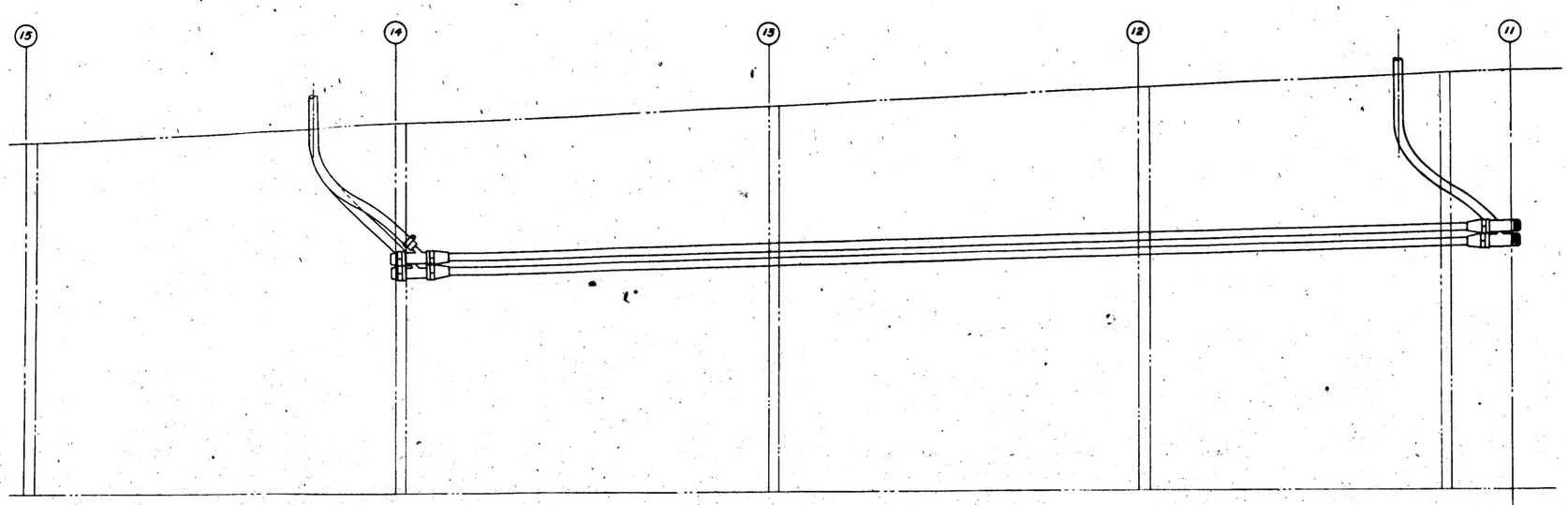

℄ WING SPLICE

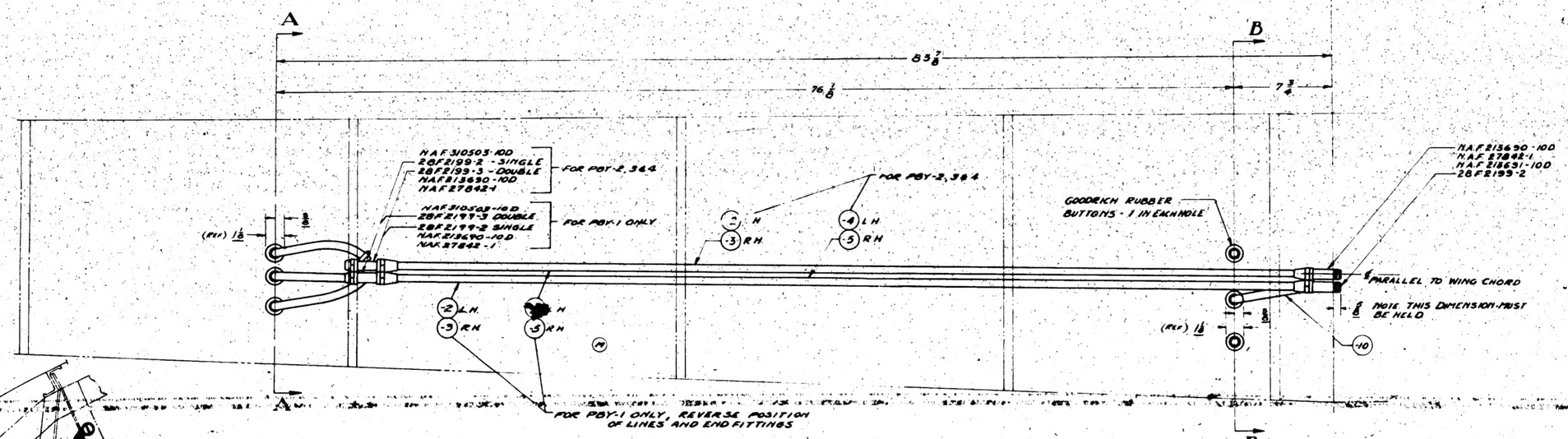

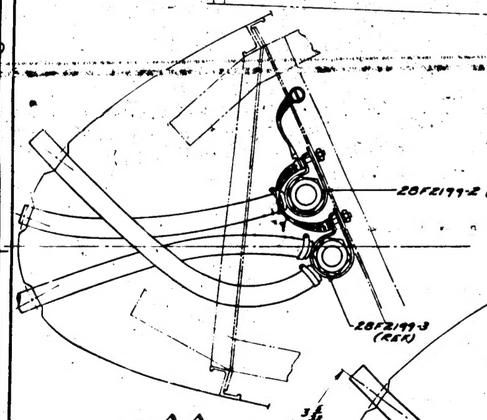

VIEW A-A
FOR PBY-1 ONLY

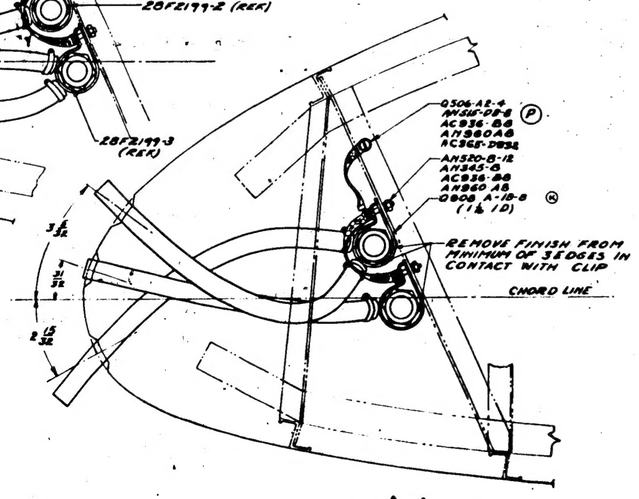

VIEW A-A FOR PBY-2 & 4
SHOWING CLIPPING & BONDING AT STA. "H"
AND TYPICAL INSTALL OF DE-ICER TUBES

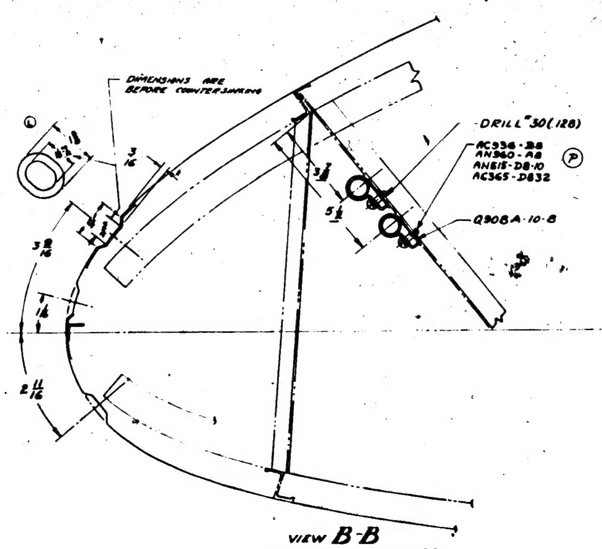

VIEW B-B
SHOWING LOCATION OF TUBING AT STA. 11 & BONDING AT STA. "H" 12 18

5/8" I.D. GOODRICH DE-ICER HOSE			
PART	APPROX. LENGTH	REQ. L	REQ. R
-10	18	1	1

5/8" O.D. .042 AL ALLOY TUBING SPEC. M-28 TA CONDITION ALUM 3230			
PART	APPROX. LENGTH	REQ. L	REQ. R
-2	78	1	1
-3	78	1	1
-4	78	1	1
-5	78	1	1

GOODRICH RUBBER BUTTONS 12

GENERAL NOTES:

MATERIAL USED FOR BONDING SHALL CONFORM TO NAVY SPEC. AS LISTED IN PAR F-1 OF SPEC. SR-160.

USE PARKER THREAD LUBE 6PE OR EQUIVALENT ON ALL DURAL THREADS.

FINISH TUBES OUTSIDE 2-P-2 FITTINGS CLIPS STANDARD PARTS P-2 P

EACH SECTION OF TUBING SHALL BE MARKED WITH A LIGHT BLUE & LIGHT GREEN STRIPE NEAR EACH END.

ALL BONDING TO BE IN ACCORDANCE WITH BONDING DIAGRAM 28E1192.

USE FRICTION TAPE UNDER ALL HOSE CLAMPS.

FINISH CODE

T	[redacted]
P	[redacted]
AP	[redacted]
M	[redacted]